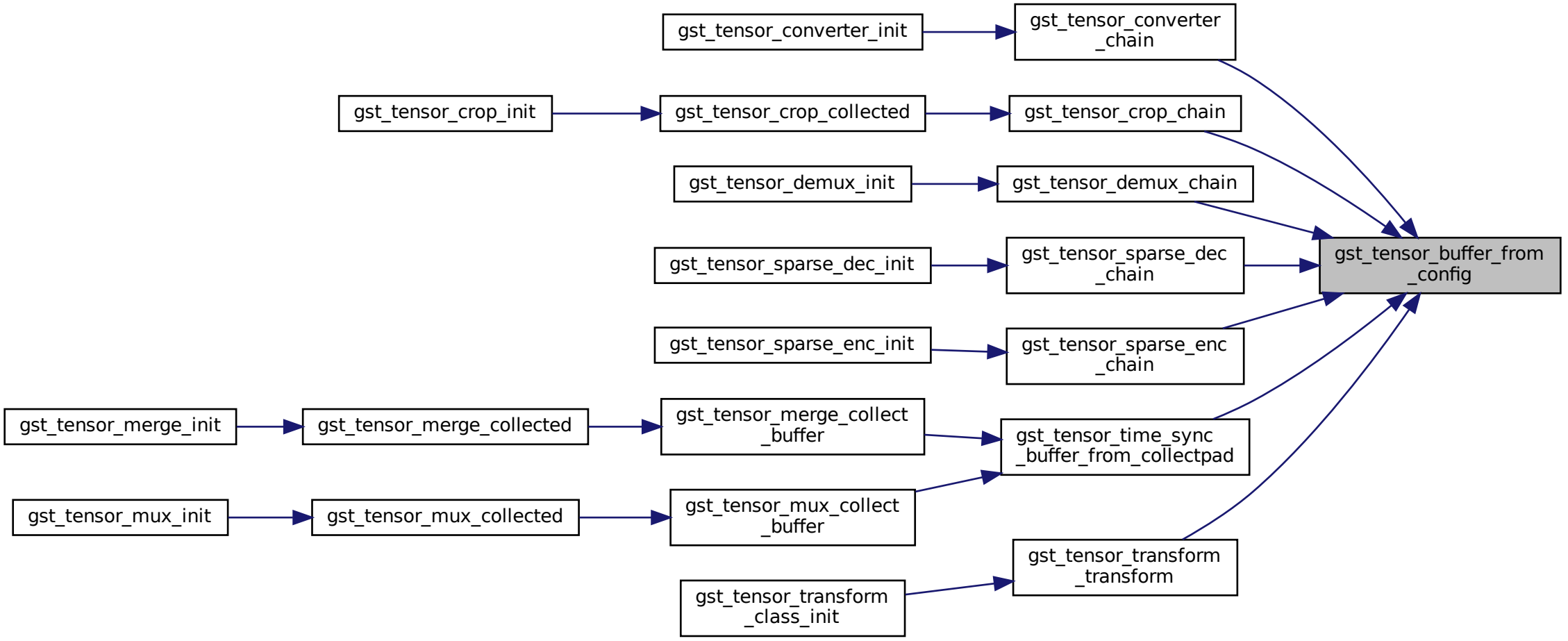
gst_tensor_converter_init
gst_tensor_converter_chain
gst_tensor_crop_init
gst_tensor_crop_collected
gst_tensor_crop_chain
gst_tensor_demux_init
gst_tensor_demux_chain
gst_tensor_sparse_dec_init
gst_tensor_sparse_dec_chain
gst_tensor_buffer_from_config
gst_tensor_sparse_enc_init
gst_tensor_sparse_enc_chain
gst_tensor_merge_init
gst_tensor_merge_collected
gst_tensor_merge_collect_buffer
gst_tensor_time_sync_buffer_from_collectpad
gst_tensor_mux_init
gst_tensor_mux_collected
gst_tensor_mux_collect_buffer
gst_tensor_transform_transform
gst_tensor_transform_class_init